[Faulty model] iPad6

[Fault phenomenon] The front camera cannot be used normally.

[Maintenance process] Get the device boot detection, found that the front camera can not be used, other functions are as follows:

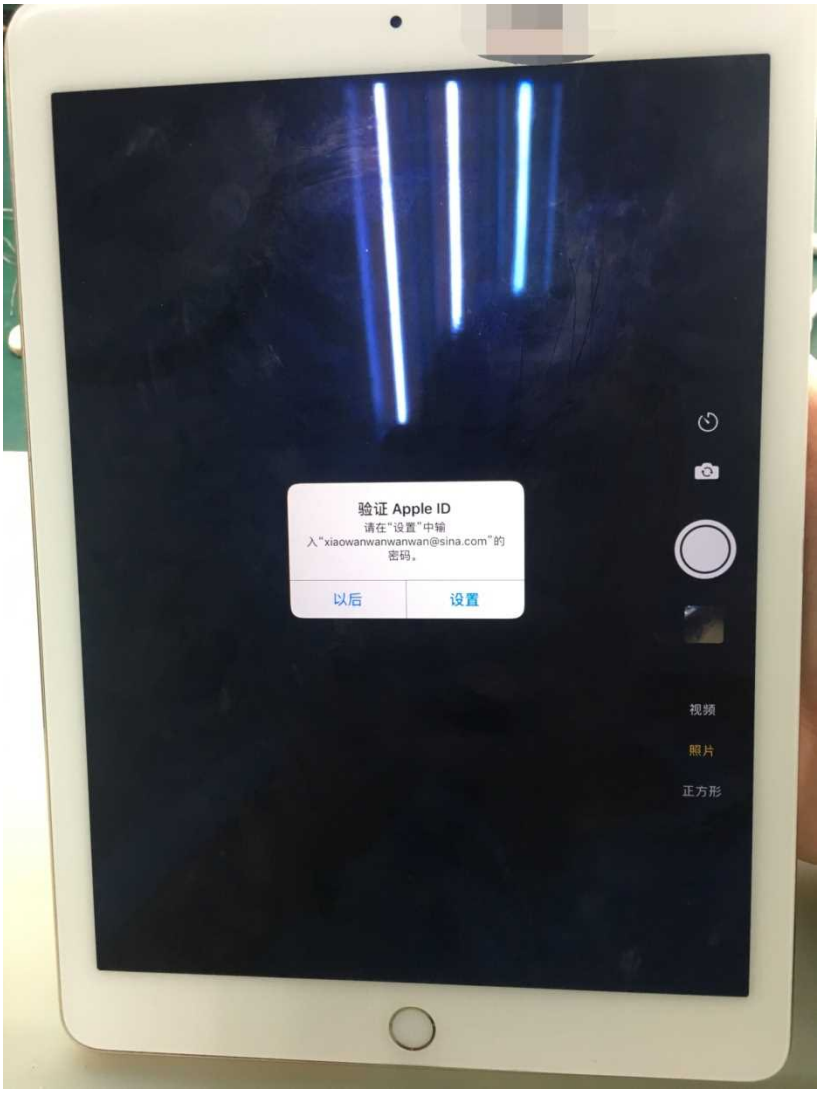

The Screen Outer Layer Glass integrated in this machine should be disassembled carefully. First measure the front camera connector diode value.

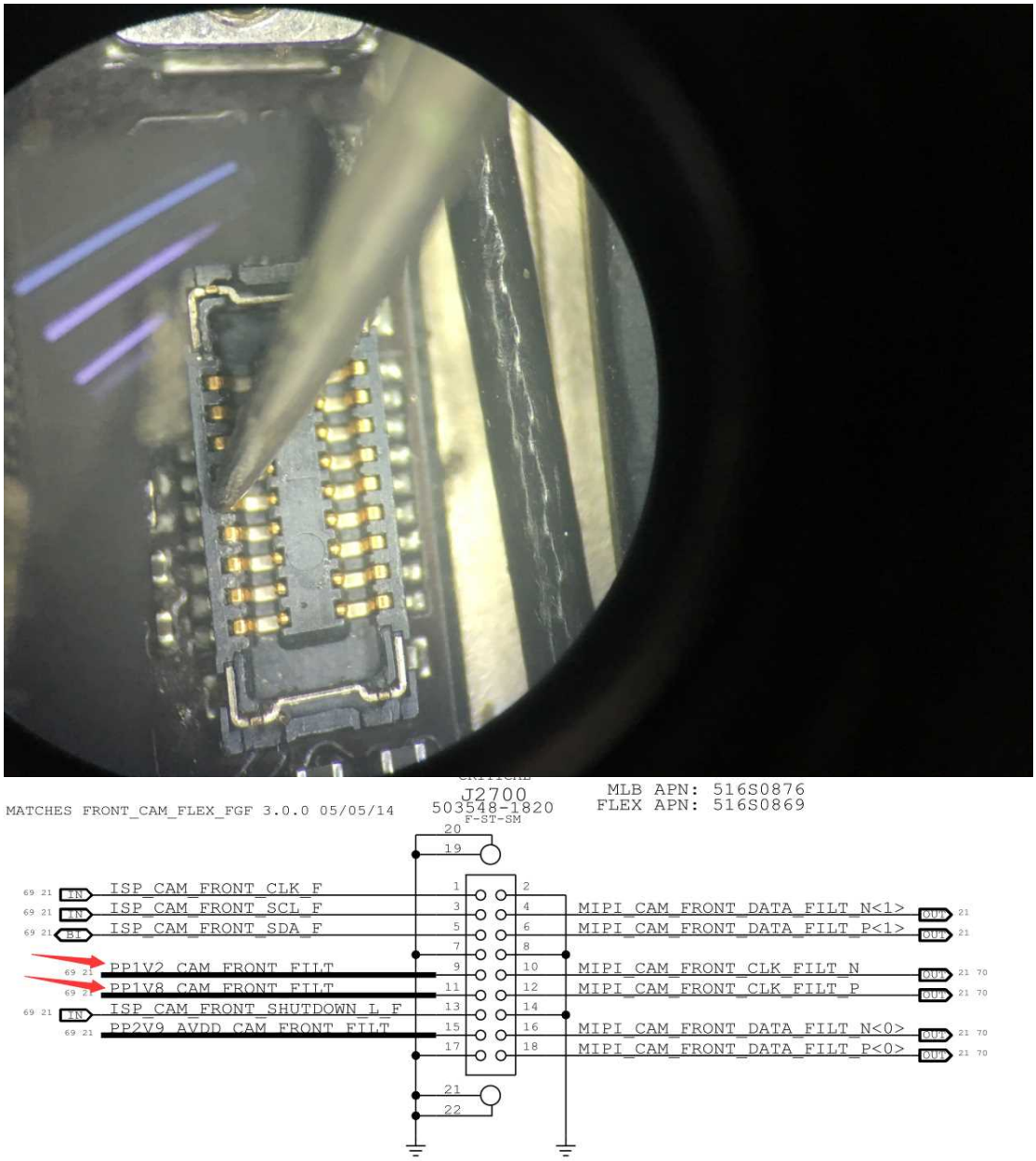

The front Camera pp1v2_CAM and pp1v8_CAM two VCC disconnected without diode value.

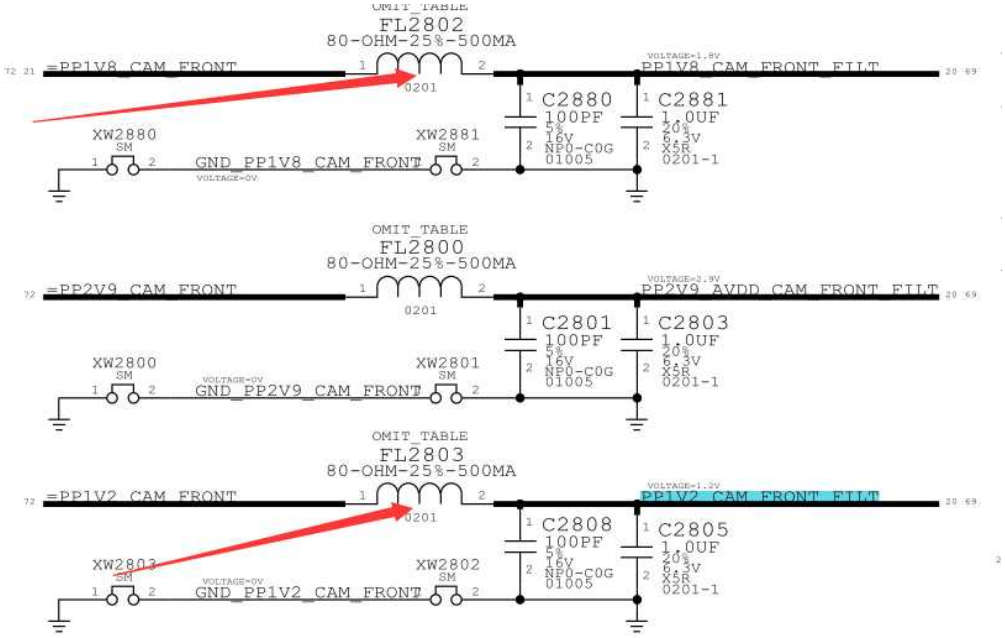

After measuring FL2802 and FL2803 respectively, Inductor is damaged and open, which can be directly connected.

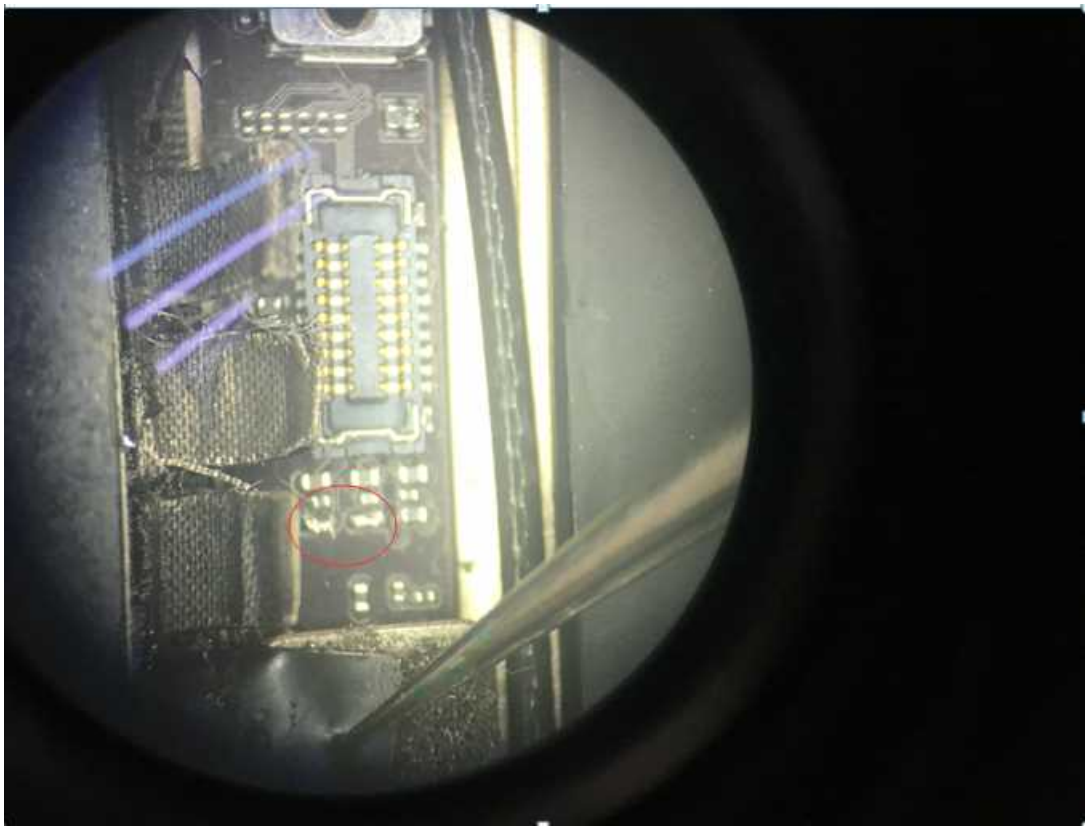

The boot test Camera is normal.

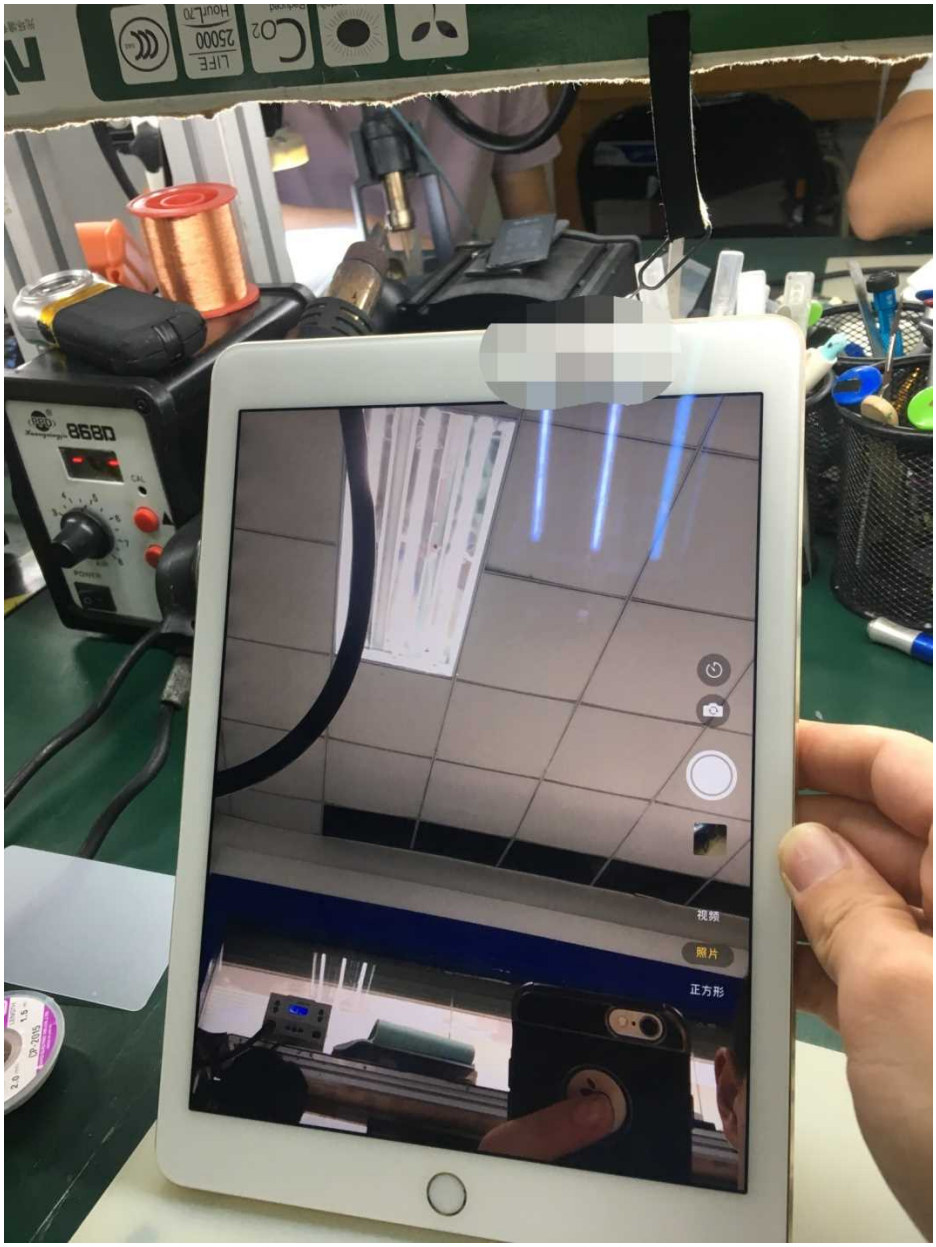
868D
视频
照片
正方形